3501 CR 6 EAST
ELKHART, IN 46514

Digitally signed by Lyndon F Schmidt
Date: 2025.10.13 14:38:07 -04'00'

L. F. SCHMIDT LICENSE No. 43409 STATE OF FLORIDA PROFESSIONAL ENGINEER

This item has been digitally signed and sealed by **L. F. Schmidt, P.E.** on the date adjacent to the seal.

Printed copies of this document are not considered signed and sealed and the signature must be verified on any electronic copies.

THIS PRODUCT APPROVAL IS VALID ONLY FOR THE STATE OF FLORIDA

MODEL 7300
PVC SLIDING GLASS DOOR
w/ NAILING FIN
"NON-IMPACT"

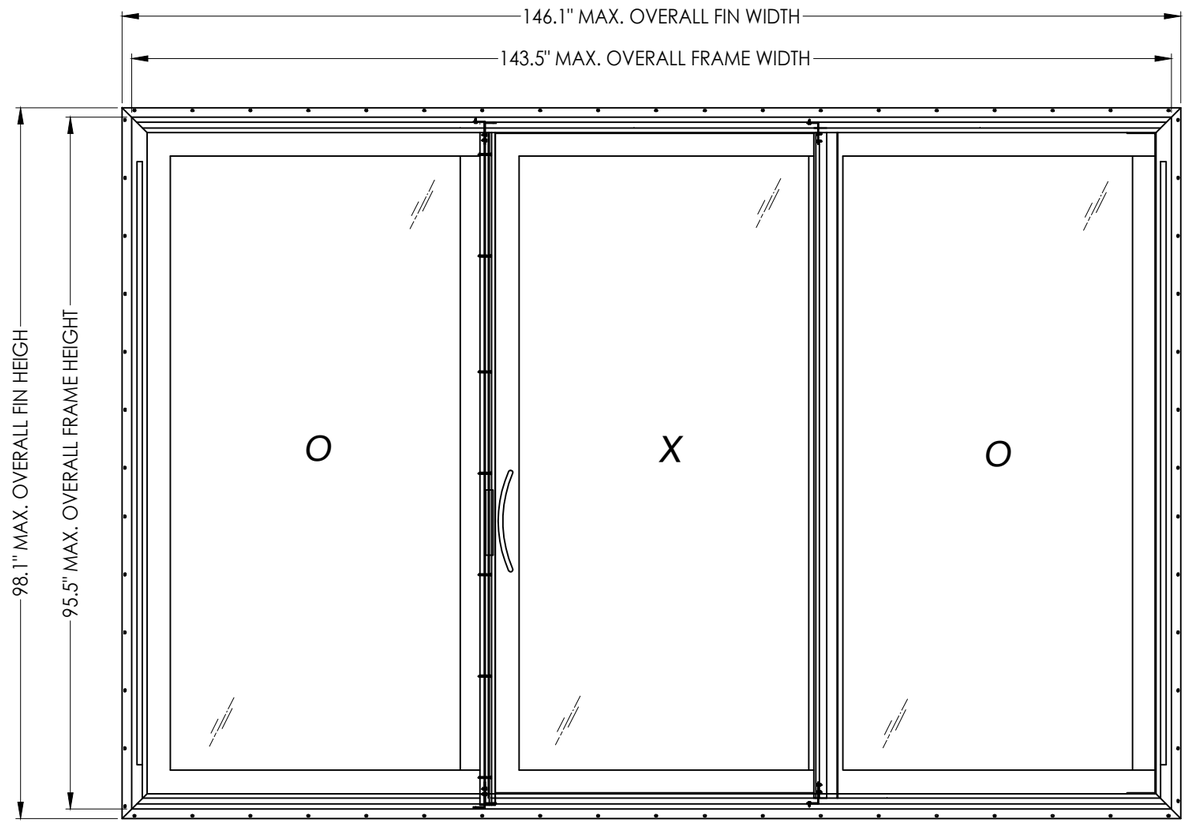

GENERAL NOTES

1. This product anchoring drawing has been developed in compliance with the 8th Edition (2023) Florida Building Code (FBC) excluding the "High Velocity Hurricane Zone". See the Certification Agency Certificate for sizes, specifications and ratings.
2. Product anchors shall be as listed and spaced as shown on details. Anchor embedment to base material shall be beyond wall dressing, stucco, foam, brick and other wall coverings.
3. Fastener embedment depths, edge distances and center-center distances shall be as specified by the fastener manufacturer but in no instance shall they be less than shown in this drawing.
4. Where shims are used, they must be a "rigid / stiff" material that complies with the requirements of the FBC.
5. Positive and negative design pressure requirements for use with this drawing shall be determined by others for specific jobs in accordance with the governing code.
6. Site conditions not covered by this drawing are subject to further engineering analysis.

MAX. O.A. FIN DIMENSION	MAX. O.A. FRAME. DIMENSION	DESIGN PRESSURE (PSF)	
		POSITIVE	NEGATIVE
146.1" X 98.1"	143.5" X 95.5"	+50.0	-50.0

TABLE OF CONTENTS

SHEET#	DESCRIPTION
1	Typical elevation, design pressures & general notes
2	Horizontal cross sections & bill of materials
3	Vertical cross sections
4	Buck anchoring
5	Frame anchoring & glazing detail

Documents Prepared By:
Lyndon F. Schmidt
P.E. No. 43409
RW BUILDING CONSULTANTS, INC.
P.O. Box 230, Valrico, FL 33595
Phone No.: 813.659.9197
FBPE Registry No. 9813

PRODUCT: SLIDING GLASS DOOR

PART OR ASSEMBLY: TYPICAL ELEVATION, DESIGN PRESSURES & GENERAL NOTES

NO.	DATE	REVISIONS	BY

DATE: 9/15/25
SCALE: N.T.S.
DWG. BY: LFS
CHK. BY: RW
DRAWING NO.: FL-47840.3
SHEET 1 OF 5

© 2025 R.W. BUILDING CONSULTANTS INC.

Z:\2023 FBC Drawings\Lippert Components, Inc\FL-47840 Sliding Door\FL-47840.3.dwg

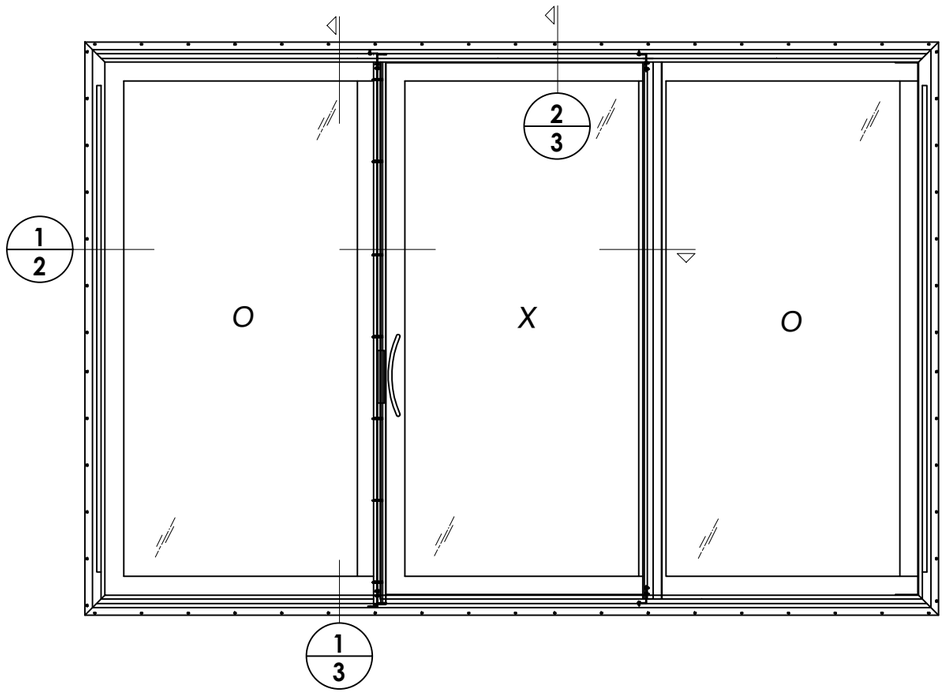

BILL OF MATERIALS		
ITEM	DESCRIPTION	MATERIAL
A	3/16" MAX. SHIM SPACE	-
B	2X BUCK (G >= 0.42)	WOOD
C	MASONRY - 3,000 PSI MIN. CONCRETE CONFORMING TO ACI 301 OR HOLLOW BLOCK CONFORMING TO ASTM C90	CONCRETE
D	#8 X 1-1/4" PH SMS (1-1/8" MIN. EMBEDMENT)	STEEL
E	1/4" X 2-3/4" PFH DeWALT OR ITW CONCRETE SCREW	STEEL
F	#8 X 2" PH SMS (1-1/4" MIN. EMBEDMENT)	STEEL
G	#8 X 2-1/2" PH SMS (1-1/2" MIN. EMBEDMENT)	STEEL

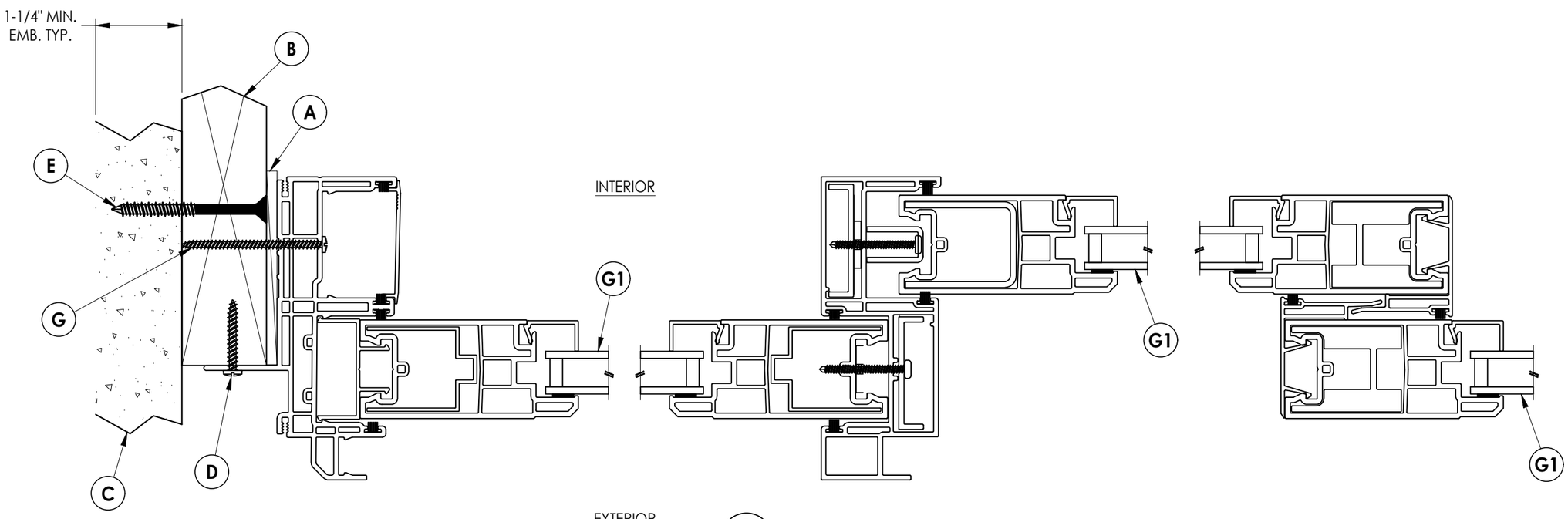

1/2 **HORIZONTAL CROSS SECTION**
Shown w/ 2X Buck Installation

Z:\2023 FBC Drawings\Lippert Components, Inc\FL-47840 Sliding Door\FL-47840.3.dwg

Documents Prepared By:
Lyndon F. Schmidt
P.E. No. 43409

RW BUILDING CONSULTANTS, INC.
P.O. Box 230, Valrico, FL 33595
Phone No.: 813.659.9197
FBPE Registry No. 9813

PRODUCT: SLIDING GLASS DOOR

PART OR ASSEMBLY: HORIZONTAL CROSS SECTIONS & BILL OF MATERIALS

NO.	DATE	REVISIONS	BY

DATE: 9/15/25
SCALE: N.T.S.
DWG. BY: LFS
CHK. BY: RW
DRAWING NO.: FL-47840.3
SHEET 2 OF 5

© 2025 R.W. Building Consultants Inc.

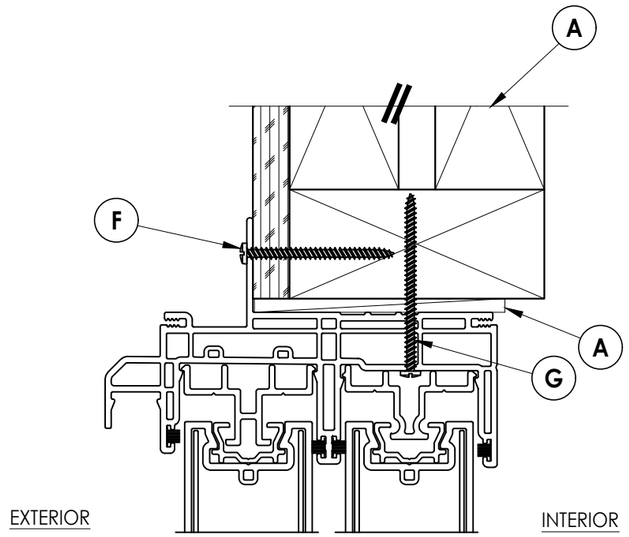

2/3 VERTICAL CROSS SECTION
Shown w/ 2X Stud Installation

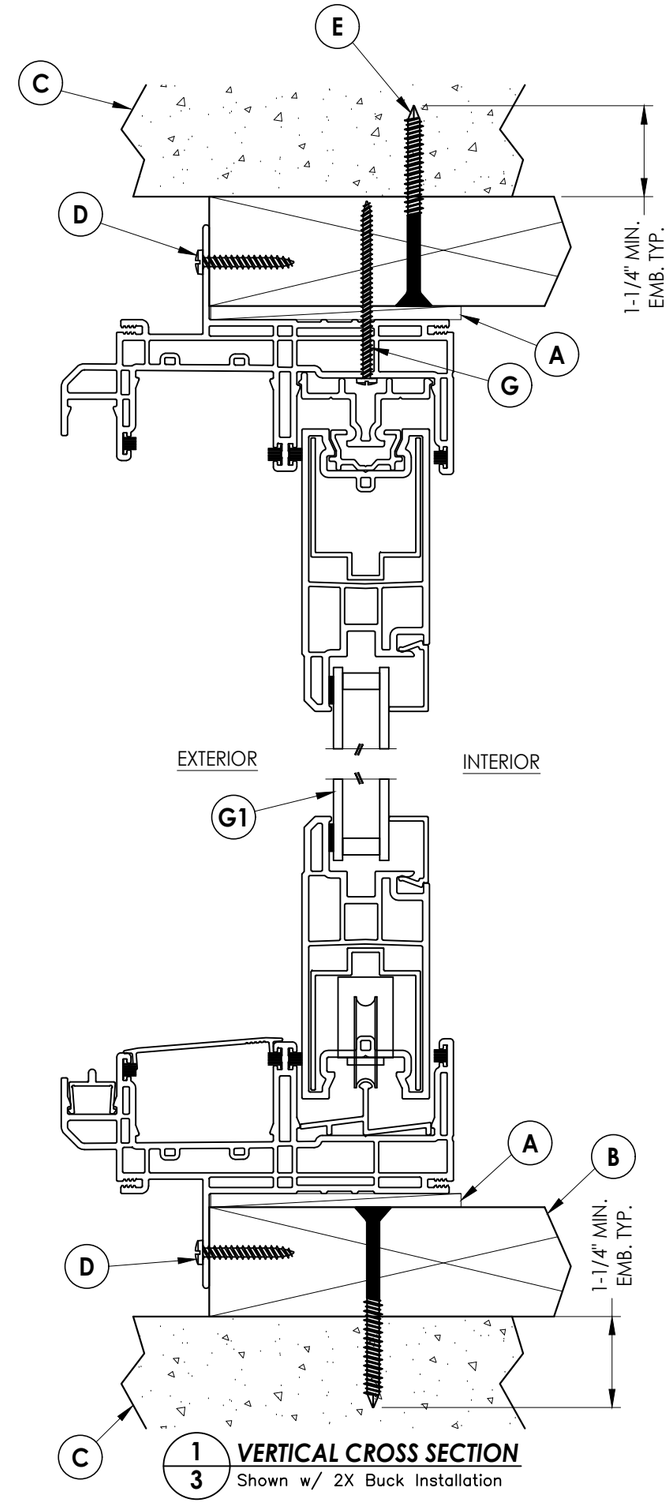

1/3 VERTICAL CROSS SECTION
Shown w/ 2X Buck Installation

Documents Prepared By:
Lyndon F. Schmidt
P.E. No. 43409

RW BUILDING CONSULTANTS, INC.
P.O. Box 230, Valrico, FL 33595
Phone No.: 813.659.9197
FBPE Registry No. 9813

PRODUCT: SLIDING GLASS DOOR

PART OR ASSEMBLY: VERTICAL CROSS SECTIONS

NO.	DATE	REVISIONS	BY

DATE: 9/15/25
SCALE: N.T.S.
DWG. BY: LFS
CHK. BY: RW
DRAWING NO.: FL-47840.3
SHEET 3 OF 5

© 2025 R.W. Building Consultants Inc.

Z:\2023 FBC Drawings\Lippert Components, Inc\FL-47840 Sliding Door\FL-47840.3.dwg

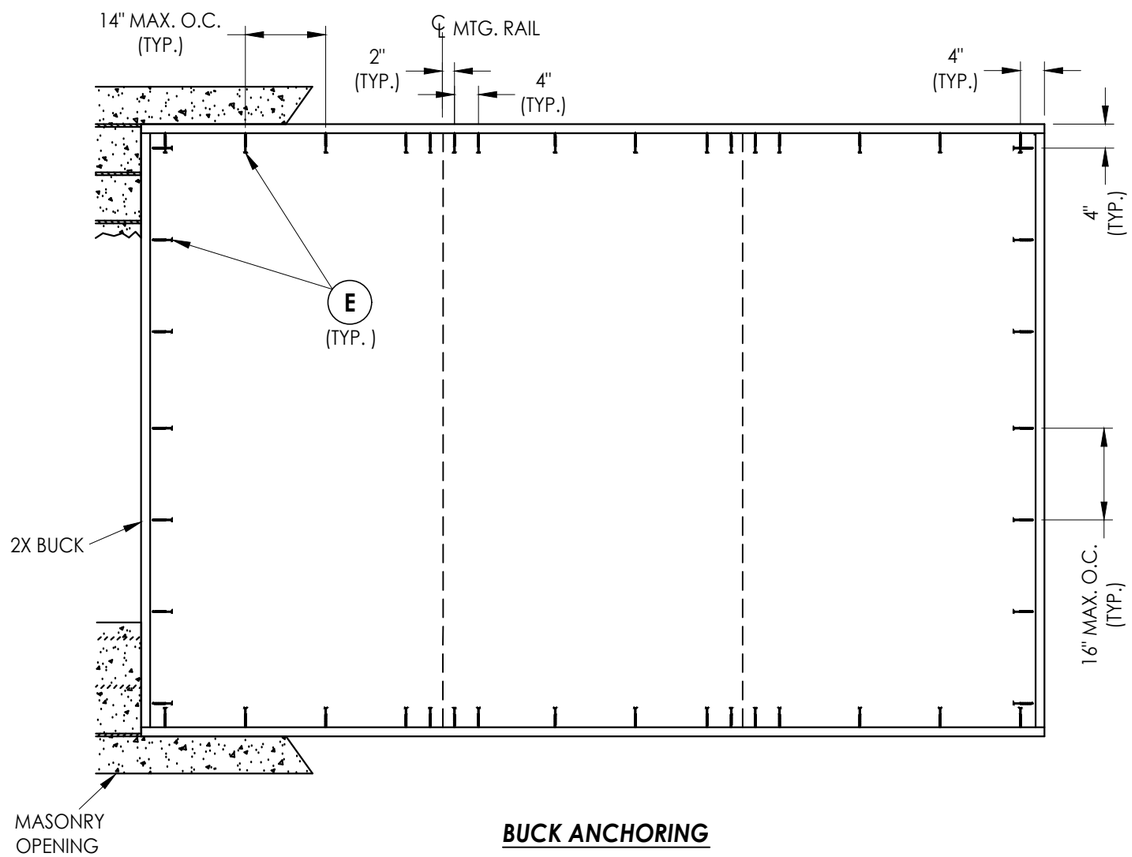

BUCK ANCHORING

CONCRETE ANCHOR NOTES:

1. Concrete anchor locations at the corners may be adjusted to maintain the min. edge distance to mortar joints.
2. Concrete anchor locations noted as "MAX. ON CENTER" must be adjusted to maintain the min. edge distance to mortar joints, additional concrete anchors may be required to ensure the "MAX. ON CENTER" dimension are not exceeded.
3. Concrete anchor table:

ANCHOR TYPE	ANCHOR SIZE	MIN. EMBEDMENT	MIN. CLEARANCE TO MASONRY EDGE	MIN. CLEARANCE TO ADJACENT ANCHOR
ITW TAPCON®	1/4"	1-1/4"	2"	4"
DeWALT ULTRACON+®	1/4"	1-1/4"	1"	4"

WOOD SCREW INSTALLATION NOTES:

1. Maintain a minimum 5/8" edge distance, 1" end distance, & 1" o.c. spacing of wood screws to prevent the splitting of wood.

Documents Prepared By:
Lyndon F. Schmidt
P.E. No. 43409
RW BUILDING CONSULTANTS, INC.
P.O. Box 230, Valrico, FL 33595
Phone No.: 813.659.9197
FBPE Registry No. 9813

PRODUCT: SLIDING GLASS DOOR

PART OR ASSEMBLY: BUCK ANCHORING

REVISIONS

NO.	DATE	BY

DATE: 9/15/25
SCALE: N.T.S.
DWG. BY: LFS
CHK. BY: RW
DRAWING NO.: FL-47840.3
SHEET 4 OF 5

© 2025 R.W. BUILDING CONSULTANTS INC.

Z:\2023 FBC Drawings\Lippert Components, Inc\FL-47840 Sliding Door\FL-47840.3.dwg

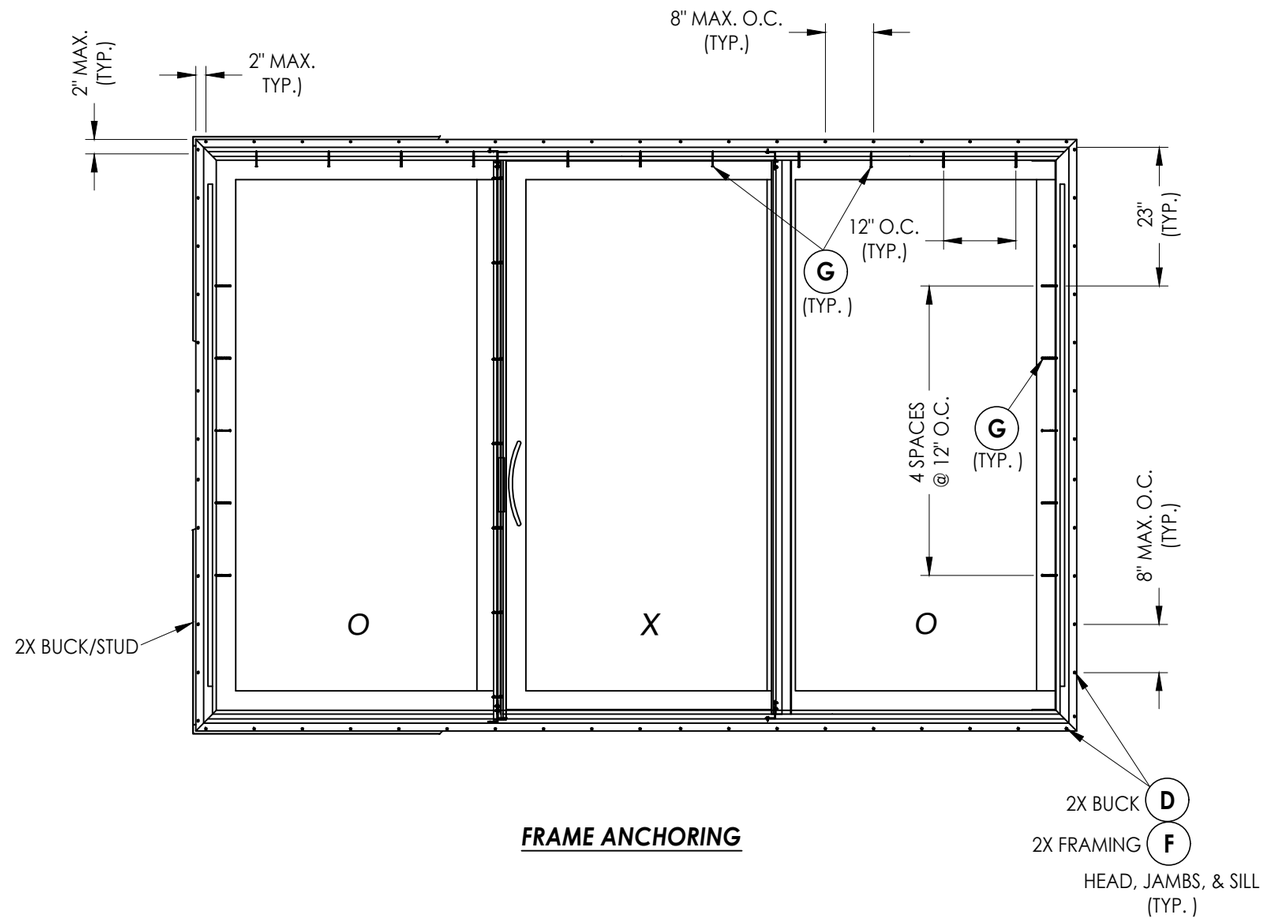

FRAME ANCHORING

CONCRETE ANCHOR NOTES:

1. *Concrete anchor locations at the corners may be adjusted to maintain the min. edge distance to mortar joints.*
2. *Concrete anchor locations noted as "MAX. ON CENTER" must be adjusted to maintain the min. edge distance to mortar joints, additional concrete anchors may be required to ensure the "MAX. ON CENTER" dimension are not exceeded.*
3. *Concrete anchor table:*

ANCHOR TYPE	ANCHOR SIZE	MIN. EMBEDMENT	MIN. CLEARANCE TO MASONRY EDGE	MIN. CLEARANCE TO ADJACENT ANCHOR
ITW TAPCON®	1/4"	1-1/4"	2"	4"
DeWALT ULTRACON+®	1/4"	1-1/4"	1"	4"

WOOD SCREW INSTALLATION NOTES:

1. *Maintain a minimum 5/8" edge distance, 1" end distance, & 1" o.c. spacing of wood screws to prevent the splitting of wood.*

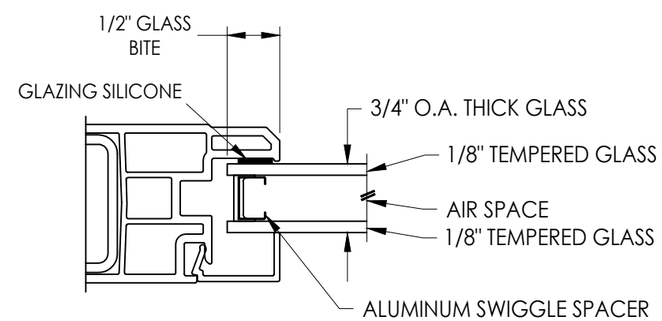

G1 ***GLAZING DETAIL***

Documents Prepared By:
Lyndon F. Schmidt
P.E. No. 43409
RW BUILDING CONSULTANTS, INC.
P.O. Box 230, Valrico, FL 33595
Phone No.: 813.659.9197
FBPE Registry No. 9813

PRODUCT: *SLIDING GLASS DOOR*

PART OR ASSEMBLY: *FRAME ANCHORING & GLAZING DETAIL*

NO.	DATE	REVISIONS	BY

DATE: 9/15/25
SCALE: N.T.S.
DWG. BY: LFS
CHK. BY: RW
DRAWING NO.: FL-47840.3
SHEET 5 OF 5

© 2025 R.W. Building Consultants Inc.

Z:\2023 FBC Drawings\Lippert Components, Inc\FL-47840 Sliding Door\FL-47840.3.dwg